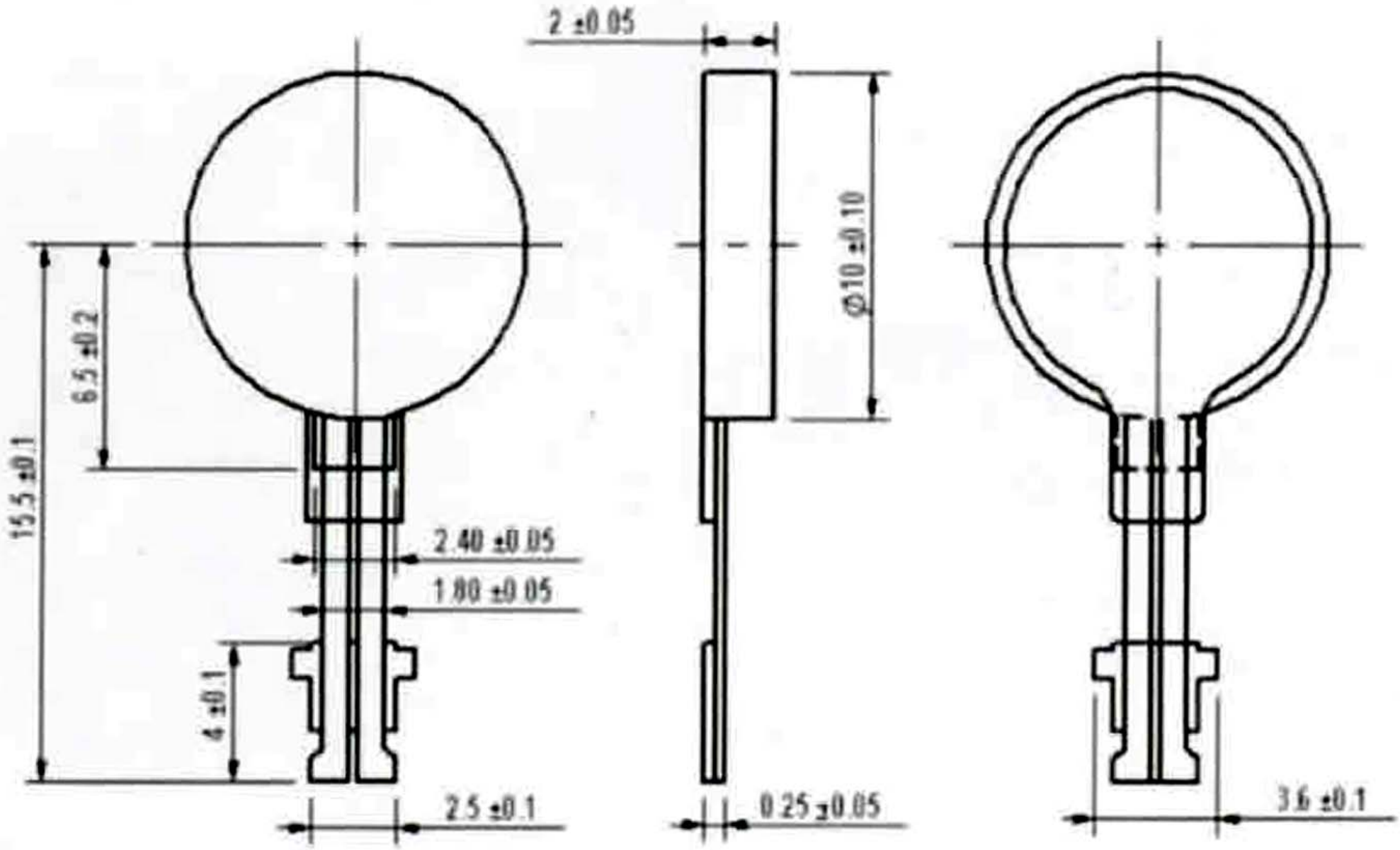
2 ±0.05
Ø10 ±0.10
6.5 ±0.2
15.5 ±0.1
2.40 ±0.05
1.80 ±0.05
4 ±0.1
2.5 ±0.1
0.25 ±0.05
3.6 ±0.1