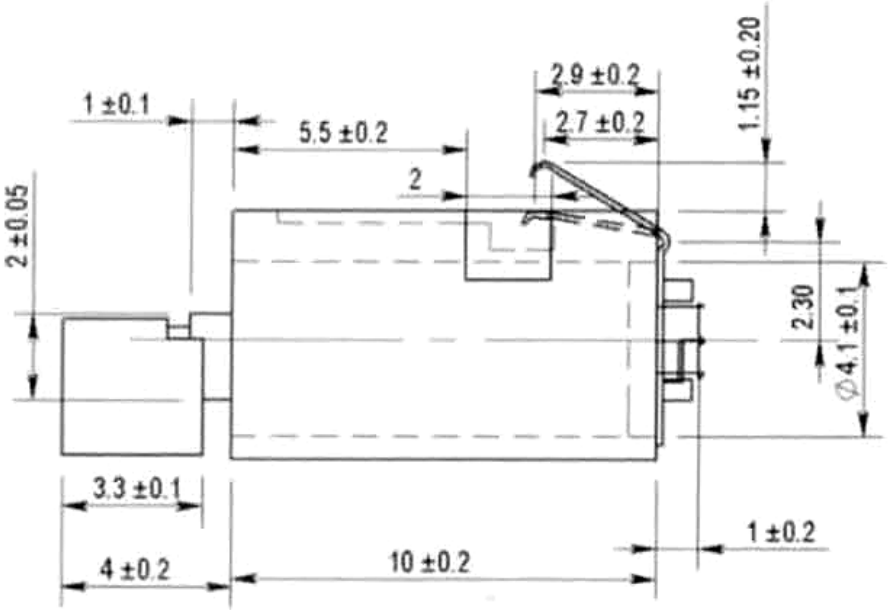
1 ±0.1
5.5 ±0.2
2
2.9 ±0.2
2.7 ±0.2
1.15 ±0.20
2 ±0.05
2.30
Ø4.1 ±0.1
3.3 ±0.1
4 ±0.2
10 ±0.2
1 ±0.2

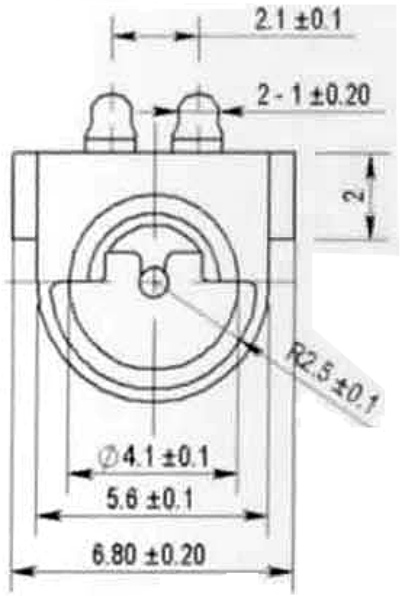
2.1 ±0.1
2 - 1 ±0.20
2
R2.5 ±0.1
Ø4.1 ±0.1
5.6 ±0.1
6.80 ±0.20

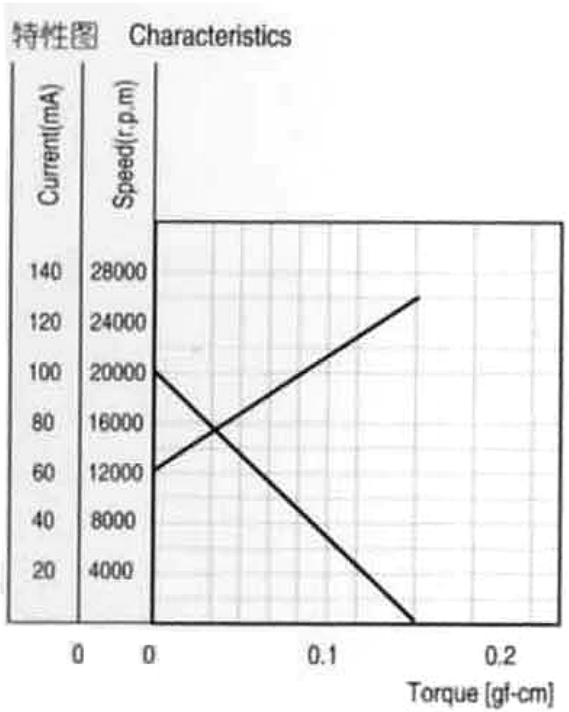
特性图 Characteristics
Current(mA)
Speed(r.p.m)
140 28000
120 24000
100 20000
80 16000
60 12000
40 8000
20 4000
0
0
0.1
0.2
Torque [gf-cm]